'Doug' WA8NGJ

RTTY JOURNAL
P O Box 837
Royal Oak, Mich. 48068

January 1970

RTTY JOURNAL

EXCLUSIVELY AMATEUR RADIO TELETYPE

Volume 18 No. 1 30 Cents

SEASONS GREETINGS

RTTY SKETCH BY JOHN VIDNIC RTTY TTY BY DON WA6PIR ENCINO CALIFORNIA

2nd 'Giant' RTTY Flash Contest

The "cq elettronica" Magazine of Italy is once again sponsoring the "GIANT" RTTY FLASH CONTEST.

This is a "FLASH" Contest because the total Contest time is limited to 16 hours divided into two 8 hours periods on two successive week-ends in February, 1970.

1. CONTEST DATES
   1st 1500-2300 GMT February 14th 1970
   2nd 1500-2300 GMT February 21st 1970, giving a total Contest time of 16 hours.
2. BANDS
   3.5 - 7 - 14 - 21 and 28 Mhz Amateurs Bands
3. COUNTRY STATUS
   The APRL Countries List will be used
4. MESSAGES
   Messages will consist of:
   a) RST Check Number
   b) Zone Number
5. EXCHANGE POINTS
   a) Each two-way RTTY contact with a station in one's own Zone will receive 2 exchange points.
   b) Each two-way contact with a station outside one's own zone will receive exchange points in accordance with the Exchange Point Table.
   Note: Stations may not be contacted more than once on any one Band but additional contacts may be made with the same Station if a different Band is used. (The Zone chart is same as used in other contests).
6. LOGS AND SCORE SHEETS
   Use one Log for each Band.
   Logs to contain: Date, Time (GMT), Call signs, Countries, RST and Zone numbers sent and received and exchange points.
   All Logs must be received by March 20th, 1970.
   Send them to:
   Prof. Franco Fanti
   Via A. Dallolio 19
   40139 Bologna, Italy.
7. MULTIPLIERS
   A multipliers is given for each Country worked. A separate multipliers may be claimed for the same Country if a different Band is used.
   The operators own Country does not qualify for a multiplier.
8. SCORING
   Total exchange points times the total numbers of multipliers.
9. SWL's
   This Contest is also open to SWL RTTYers. For the SWLs the same scoring rules are valid and a separate results table will be made for these entries.
   The Logs for SWLs must contain: Date, Time (GMT) Call sign of station heard, RST and Zone Number sent by the station heard and exchange points. The same Station is only valid once on each Band.
10. AWARDS, MEDALS & FREE SUBSCRIPTION
    The Contest Committee will compile three separate lists.
    a) General Classification
    b) Classification of Station using a power of 100W or less
    c) Short Wave Listeners
    In each of these three classes the Awards will be made:
    1st Gold Medal
    2nd Silver Medal
    3rd Silver Medal
    4th to 7th will receive a 12 month's subscription to the "cq elettronica" Magazine.
    8th to 10th will receive a 6 month's subscription to the "cq elettronica" Magazine.
    There will also be Awards for all of the Operators and SWLs that send Logs.
11. Points and positions achieved in this Contest will be valid for inclusion in the WORLD RTTY Championship Table for 1969.

Contest Manager
Prof. Franco Fanti
Via A. Dallolio n. 19
40139 Bologna, Italy

***

RTTY Contest Calendar

GIANT RTTY FLASH CONTEST
Rules in this issue.

B.A.R.T.G. SPRING RTTY CONTEST
0200 GMT Saturday, March 21st until 0200 GMT Monday, March 23rd, 1970.
Rules in next months issue.

DARA WAE RTTY Contest - last week end of April 1970

***

Solid State TT/L--MKT Demodulator.

Ole BERLAND, OZ6OB
32 Syrenvej
2970 Hoersholm, Denmark

Part Two.

In response to our request we are happy to publish a picture of the author of this popular article. As mentioned elsewhere in Johns DX column Ole may be in this country from time to time and we are sure that our readers would enjoy meeting Ole during one of his trips.

The following from Ole's letter will help everyone feel better acquainted with the author.

***

I am 37 years old and started as a licensed ham in 1950. In the beginning - as a student - with home brewed equipment. After a pause in the activity the station was reestablished 4 years ago with a Drake line: T4x and R4a and with a Mosley V-5 groundplane. 3 years ago I started on RTTY with a very simple TU and a Creed 7b pageprinter which is a very common surplus gear here in OZ-land. The Creed 7b can be purchased via the local ham organization "EDR" for less than $ 20.-! (and yet there are only very few OZ hams active on RTTY!) I am running CW and RTTY but my passion is to build TU7s and TTY-interconnections. In the Copenhagen area we have quite an activity on 2 meters with surplus taxi-radiotelephones and I think we will have some RTTY activity soon in some of the X-tal channels.

I have until now worked 36 countries on RTTY.

I am an electronic engineer with a masters degree from the technical university of Copenhagen and for the moment working as such in the hearing aid manufacturing business.

***

The following pages show the balance of the drawings for the TT/L-MKT. It promises to be one of our most popular articles.

We are also getting inquires as possible availability of printed circuit boards for the TT/L-TMK. So far we do not know of anyone making these available. If we hear anything further we will be glad to announce it in the magazine.

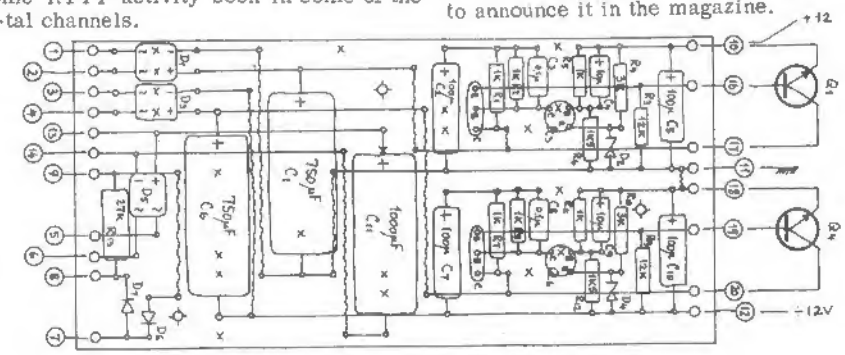

Power Supply No. 307. P.W. 9 Layout

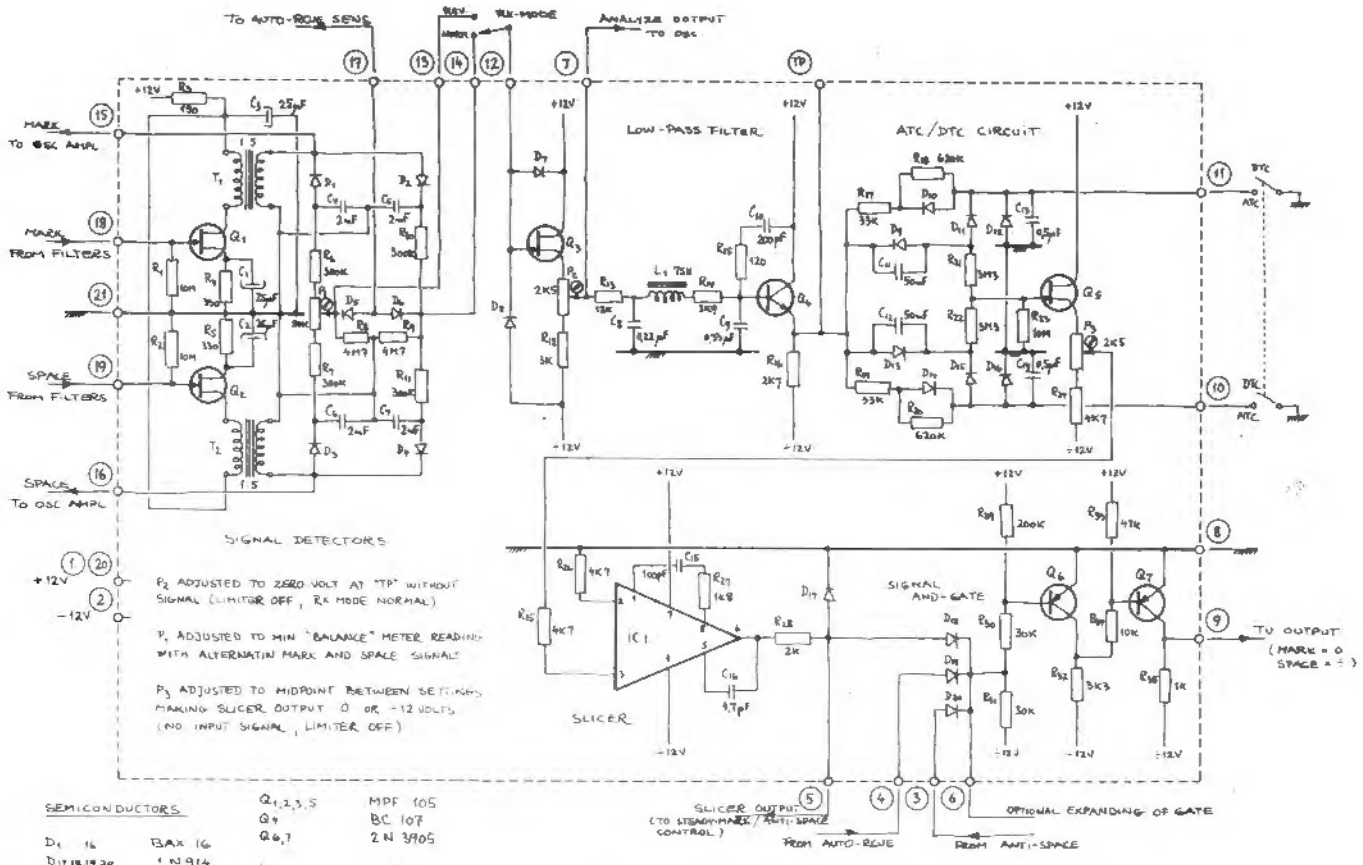

Pulseforming Circuits No. 205 P.W. Board No.5

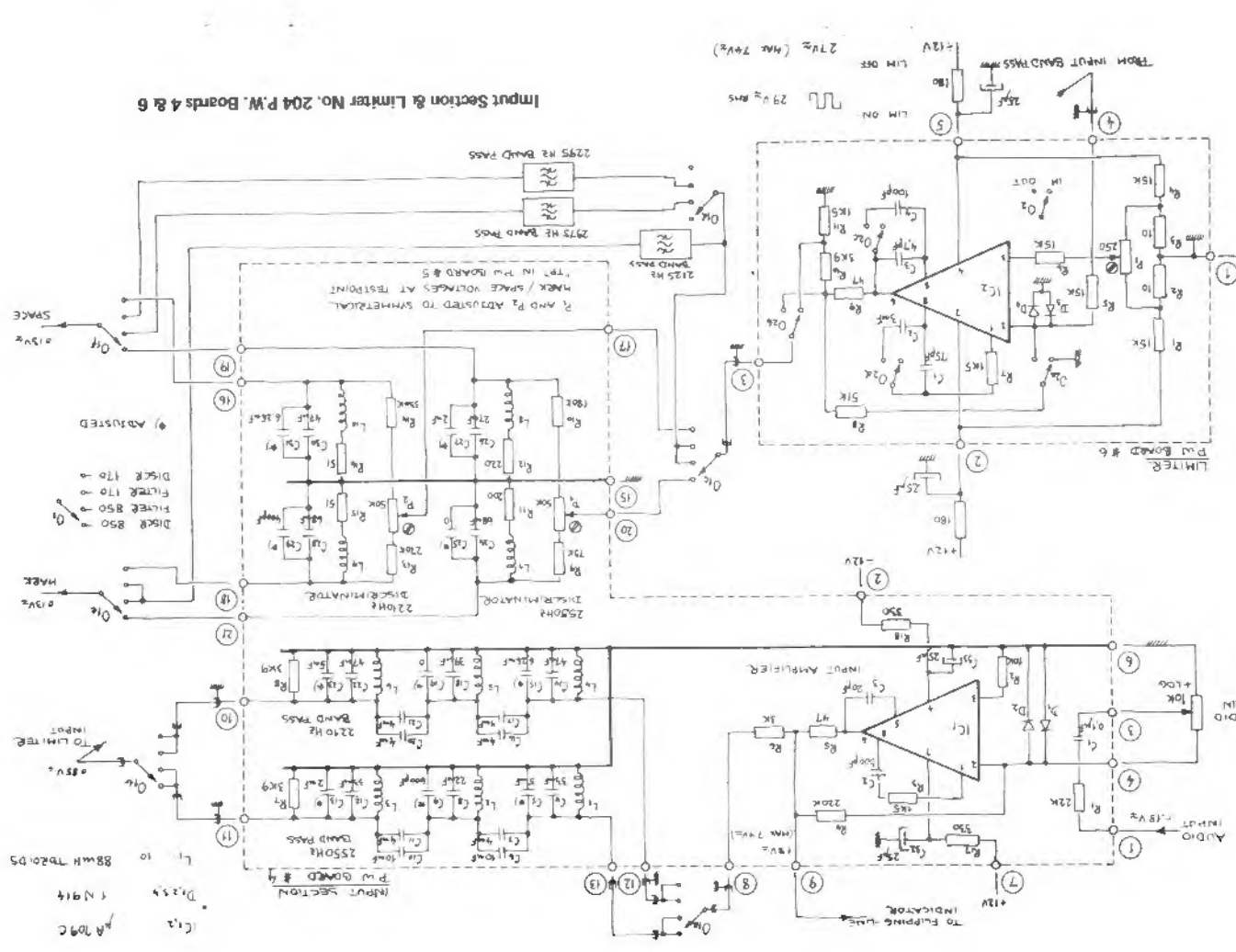

Input Section & Limiter No. 204 P.W. Boards 4 & 6

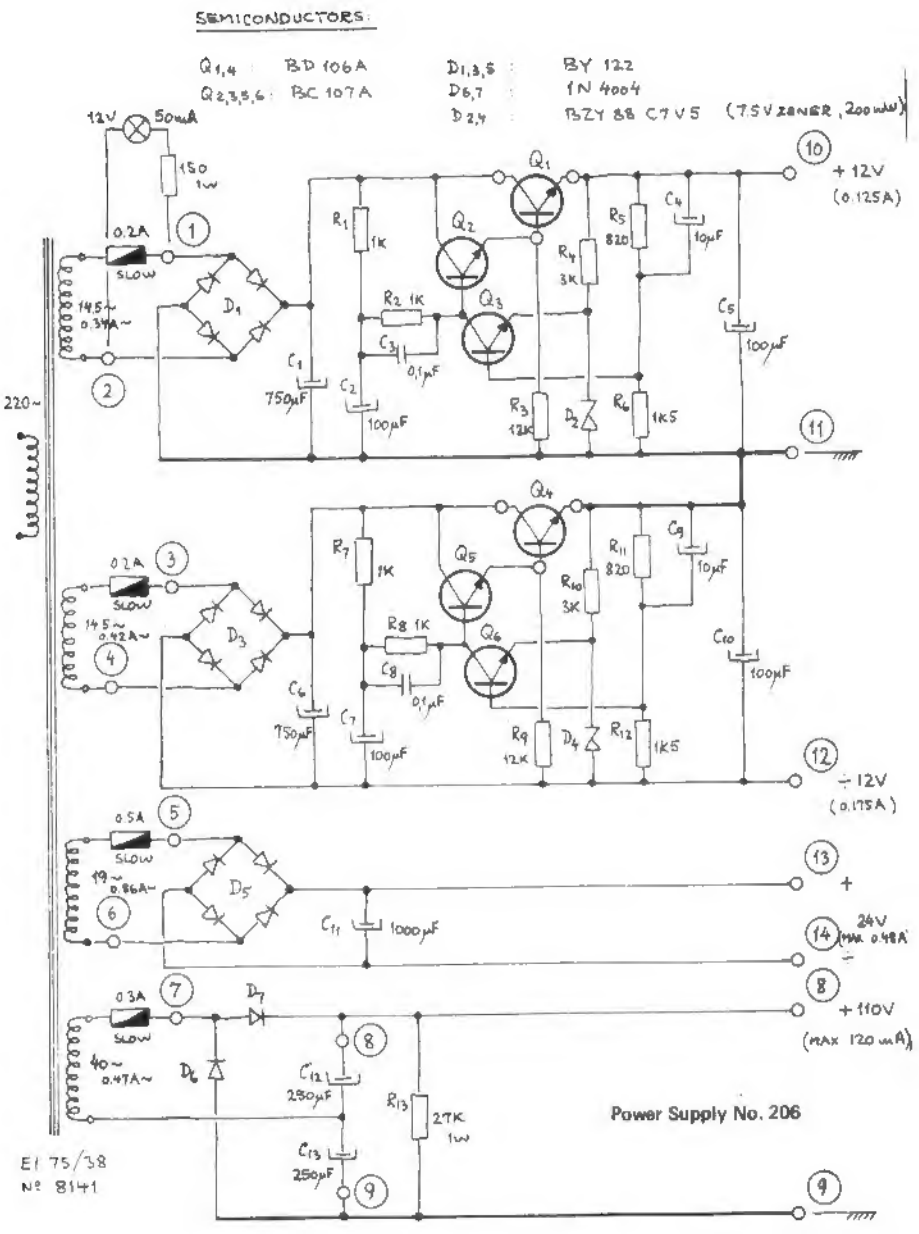

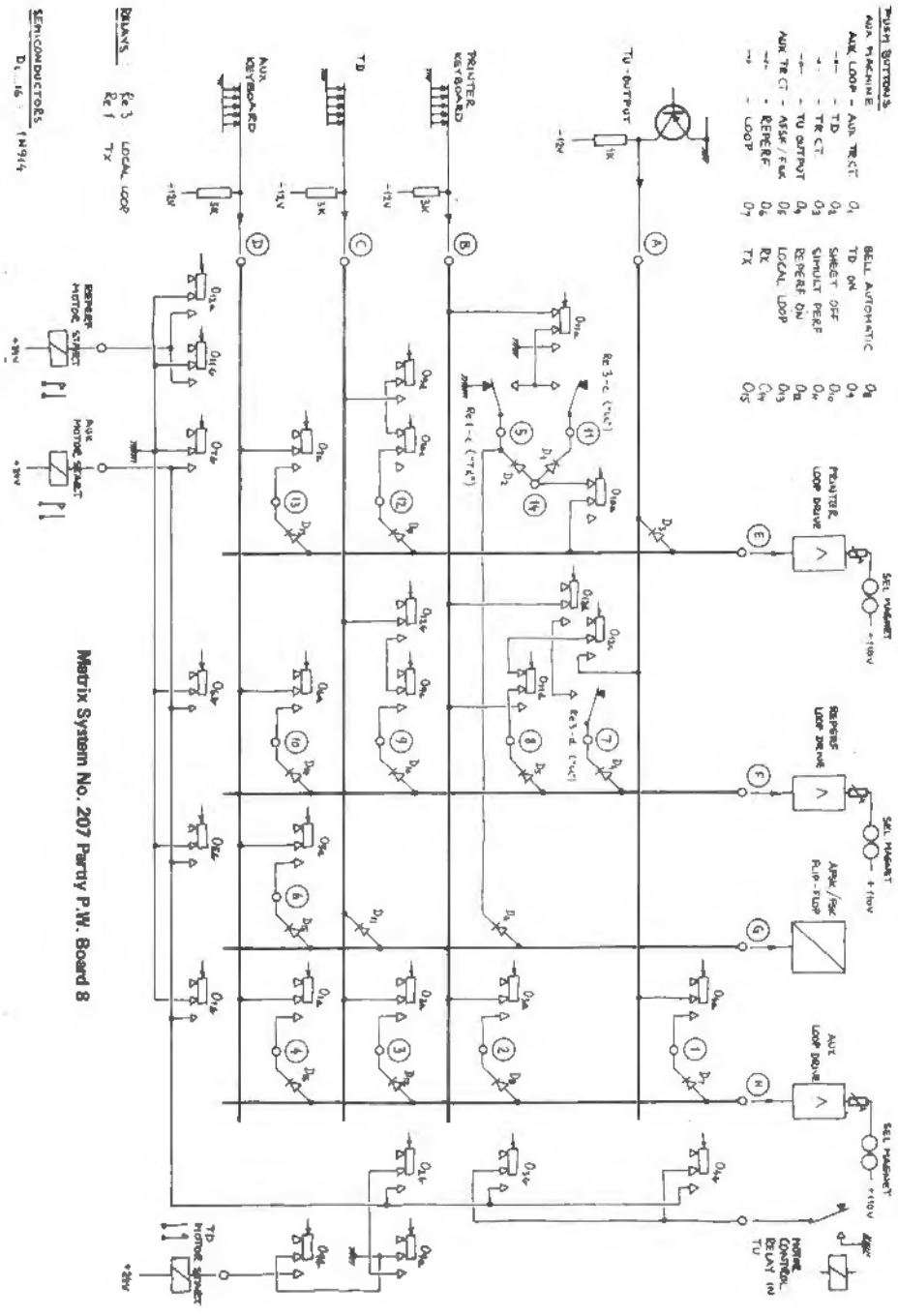

Matrix System No. 207 Partly P.W. Board 8

	Re1	Re2	Re3
"TX"	+	+	÷
"RX"	÷	÷	÷
"LOCAL LOOP"	÷	÷	+

+ : RELAY ACTIVATED
÷ : RELAY NON- -"-

$D_{17...21}$: 1N914
Re 1,2,3 : 4 ω RELAY
COIL : 700 Ω
24 V 80 mA

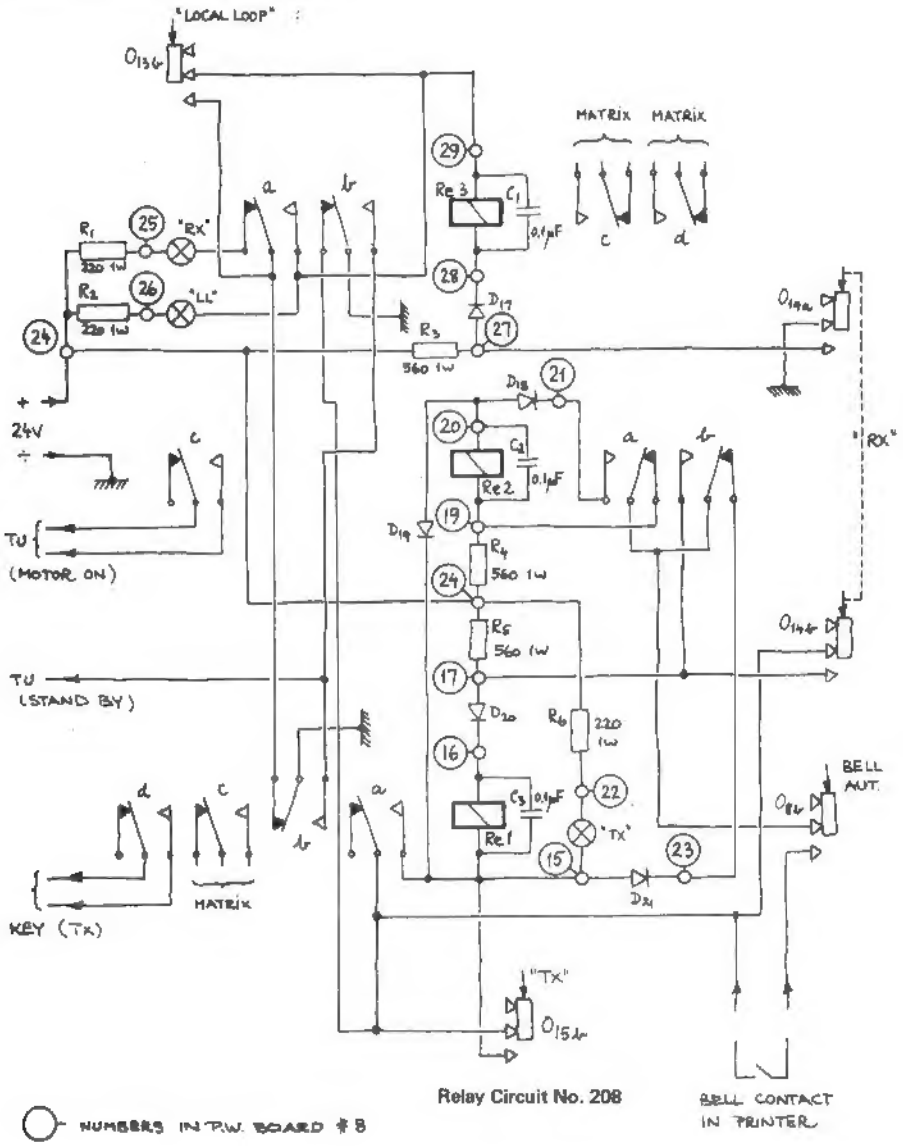

Relay Circuit No. 208

LIMITER

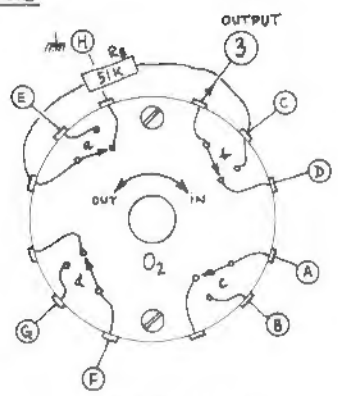

SHAFT-END VIEW

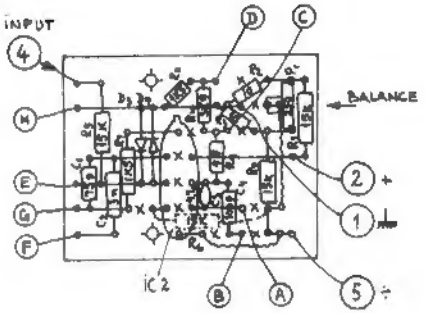

COMPONENT SIDE VIEW

P.W. BOARD # 6

INDICATOR UNIT

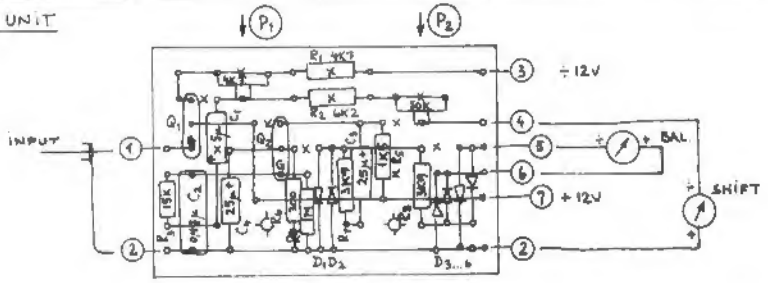

COMPONENT SIDE VIEW

P.W. BOARD # 7

MATRIX AND RELAY CIRCUIT

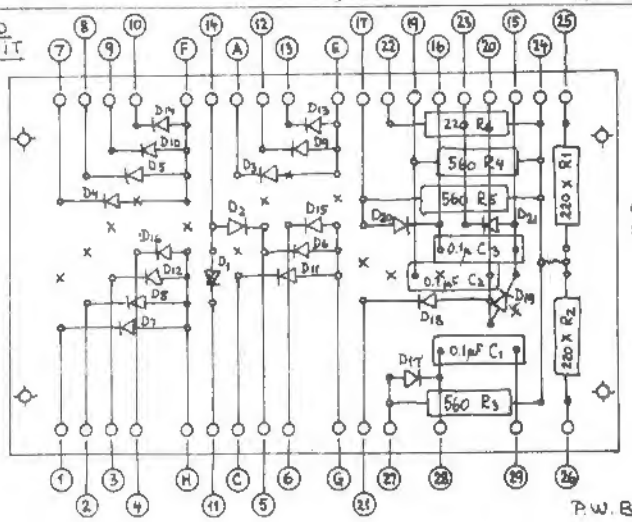

COMPONENT SIDE VIEW

P.W. BOARD # 8

Drawing No. 306
P.W. Board Layouts No. 6, No. 7, No. 8

RTTY-DX

JOHN POSSEHL - W3KV
Box 73 Blue Bell, Pa., 19422

Hell there. . .

Well, this is how it was. On the night of November 5th an hour or so before midnight we received a landline call from Arthur, W1WL, up in the Boston area with the astounding news that FB8ZZ on New Amsterdam Island was QRV. Arthur received the information in a QSO with George, I1CQD. George had worked the station earlier and wanted to get the news to Dusty. After Arthur's call we found Dusty on the usual evening frequency of 3635 khz and relayed the information. In the few weeks following Gilbert was on the band almost daily from FB8ZZ on about 14098 khz and commencing at about 1700z. He did QSO many of the boys in Europe. However, for the stateside fellows it was another story. Gilberts signal was inverted much of the time, the shift was about 600 hz., and he was sending and receiving on 50 Baud only. This set of conditions presents no problem to the boys in Europe and FB8ZZ is in the log of many of the RTTY'ers on the beam path, New Amsterdam to France. It is doubtful however, that many contacts were made with other areas particularly the states. This is a good example of the importance of having tunable filters and making use of the range knob so you can get copy from an otherwise garbled transmission. However, if you do all this and get the copy we are still not permitted to transmit on 50 Baud so it requires the other station to do the same in order to print a 45 Baud station with some intelligence. Qsl's for Gilbert to via F8US.

As of November 16th, Larry, (K1LPS) commenced operation as KG6NAA and promises plenty of activity from Guam for at least the next six months. He started off by contacting WB6RXM who was quickly followed by ZL3HJ, I1PET, and ZM2AFE/3. Larry was using the "S" Line into a TH6DX beam but at this reading probably has an after-burner installed so you should have no trouble hearing him. Based upon propagation conditions on Guam, he will be operating from about 0900 to 1200 GMT daily and most of the time over weekends. His frequency will be mainly around 14090 khz. And although he has been listening quite a bit on Fifteen Meters he has not heard anything to date. QSL's can be sent to --

L.L. Filby, KG6NAA
V-W-1 Box 72 (10) c/o FPO
San Francisco, Calif. 96637

On a recent trip to Singapore, Venkat, VU0KV, was in an "eyeball" QSO with Sam, 9V1PG (W6TXC) who has a pretty elaborate RTTY set-up but is "receive only" at the moment. Venkat indicates that transmitting problems will be overcome shortly and perhaps he is already QRV by the time you read this. This certainly would be a rare entry in anyones log. Ven further confirms that 8Q7WA in the Maldives was due to be active after the 24th of November and possibly be in the Volta Contest.

D X HONOR ROLL

Wrkd/Cfmd

1.	FG7XT	95/84	27.	W5VJP	37/32
2.	ON4BX	88/81	28.	XE1YJ	38/31
3.	I1KG	83/76	29.	K6EV	33/29
4.	W3KV	80/73	30.	W4EGY	37/28
5.	ON4CK	71/63	31.	G3IYG	33/25
6.	W8CQ	65/62	32.	WB6QFE	30/25
7.	VE3AYL	63/59	33.	WA2YVK	30/23
8.	K8YEK	65/58	34.	CE3EX	31/22
9.	WA6WGL	53/50	35.	VE5LG	29/21
10.	W5QCH	52/50	36.	VE4FG	23/21
11.	I1ROL	56/48	37.	OZ6OB	33/19
12.	W3ISE	52/47	38.	WOHAH	32/19
13.	W6CG	51/46	39.	WIACW	28/19
14.	W1GJK	52/45	40.	W3AVQ	22/19
15.	WA8BOT	51/45	41.	ZL2ALW	28/18
16.	K8QLO	51/44	42.	G3LDI	26/18
17.	W4YG	52/42	43.	WB6RXM	28/17
18.	W2LFL	51/41	44.	KL7EBK	27/17
19.	I1CAQ	43/40	45.	K9QNV	24/17
20.	K4VDM	42/40	46.	HK3SO	21/16
21.	K8JTT	41/40	47.	K9BJM	19/16
22.	WB6ADY	39/38	48.	PJ2CR	27/15
23.	W8CAT	39/35	49.	HPIXHG	24/15
24.	I1CGE	42/33	50.	VK3DM	33/14
25.	W7VKO	35/33	51.	I1THB	22/12
26.	VE4BJ	33/33	52.	DL3NO	14/10

Another fellow that does a bit of traveling is Bill, HP 1XHG. Bill occasionally gets to the mainland of Central and South America and recently dropped in on Rafael, YV5AVW. In the near future he expects to be in LU and CE land and hopes to meet some of the RTTY boys while there.

A new station is now active from the Canal Zone. Alex, KZ5EQ at Fort Clayton came on early in November and has been quite active since. At the start he was sending FSK and requesting answers on CW until he got his TU completed. His first all RTTY contact was with W4NG.

Vic, VE6VK, was recently printed again which no doubt means that Vic has returned from his travels down Antarctica way and will be active again. Contest operators should take note that Vic is in Zone 29 and adds up to quite a few points in contests using the Zone system. VK 4EV is a new station active from the Brisbane area.

You DX stations that are trying for W A S might tune up on Fifteen Meters on weekends. Bob, W5VJP: (New Mexico), Dee K7MNZ: (Idaho), and a group are trying to get some activity going there. Look for them on Saturdays and Sundays at about 1600z. Some of the other states you have been looking for and that are presently active are: Nevada, W7TZL, K5HMD/7-Utah, WA7AGO, K7YTR - Wyoming, W7RSJ - New Hampshire, K1KJL, W1ET - Mississippi, WA5DVV - Idaho, WA7JCP, W7HHF.

This month it is our pleasure to extend congratulations for W A C to -

NR. 122 Bob Wagner W5VJP

You may recall that earlier in the year Bob received a Plaque for being the first to make W A S in a one year period.

In November, Bruce, ZL1WB was in the states for about a three week stay. A group of the Southern California RTTY boys met at the QTH of Merrill, W6AEE, to welcome Bruce on his visit. On hand, in addition to Merrill were, W6CG, WA6WGL, WB6QFE, K6EQV, W6NRM, and W6LDF. Stan, WB6QFE, very kindly sent some excellent pictures of the group which we have forwarded to Dusty for inclusion in this or a future issue.

By the time you read this the Volta Contest will have been history. Much activity was anticipated as this was the last Contest of the year. To start off the new year the "Giant Flash" Contest is planned for February and full rules appear elsewhere in this issue. This Contest was quite popular last year when it appeared for the first time and it requires only two eight hour operating periods over two weekends.

The B A R T G Spring RTTY Contest is scheduled to take place March 21st to 23rd this year. The rules are the same as last year and will appear in full detail in the next issue. On behalf of the B A R T G Committee, Ted, G8CDW, Contest Manager wishes to convey their thanks and appreciation for your past support, and hope to enjoy your continued participation in this popular annual affair.

73 de John

***

Left to right
- WA6WGL, WB6QFE, W6AEE, W6CG, K6EQV, W6NRM, ZL1WB, W6LDF

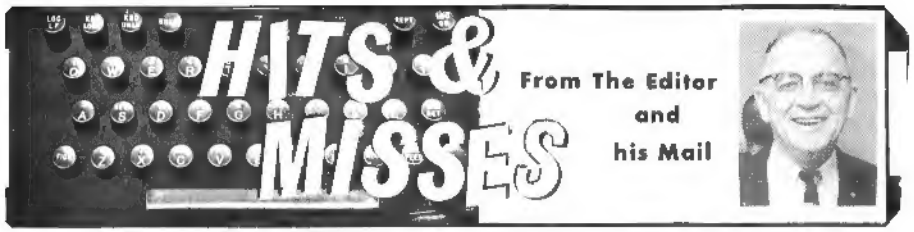

We returned from the sunny south and found ourself figuratively snowed under with mail, mostly renewals. We are catching up however and hope to get everything under control and this issue out on time. There are many letters we would like to answer but although they are on the left side of the typewriter this pile is growing and will have to wait a while. Speaking of mail we sure appreciate all the nice letters and comments received with your renewals and take this opportunity to say thanks to all.

***

This issue starts our fourth year of publishing the Journal and it seems like yesterday. We are still surprised that so many readers gladly part with the $3.00, to read our simple 16 page paper every month. Although the turn over in RTTY fans is fairly rapid we have managed to add a few more new subscribers every month over those dropping out and many have been subscribers continuously for years before we took over the magazine.

If there is any one reason for this interest it should be credited to the contributors that have supplied the many good articles. The magazine can be only as good as the information you send to us and we are proud, and appreciative of the articles you readers have taken the time and trouble to send us. It is one thing to build something but a lot of blood, sweat and tears can go into describing the same thing for publication. To these authors and contributors, whose only pay is the desire to help others in RTTY, we owe any success of this magazine. Our sincere thanks to these contributors and columnists that have done such a good job.

***

We have already received a number of requests for larger Xeroxs of the TTL/MKT drawings. These will not be available for some time and we do not know the price yet so please wait until we announce the availability before writing.

With a great many more model 28 printers now in ham use Irv Hoff, W6FFC has agreed to write a series of articles on modifications of these machines. We hope to have the first of these articles for next month.

***

A large number of requests have been received for a rerun of the ATC-DTC article from the 1964 RTTY. We hope to have this next month.

***

Another inquiry, this time from England, regarding the availability of governed motors for the 28 printers. If anyone knows the source for these motors please let us know and we will pass on the information.

***

BACK ISSUES —

The ONLY back issues available are:

July through December 1966. No issues of 1967. All issues of 1968 except January and November. All issues of 1969. (July-August is one issue.) Copies are 30¢ each. RTTY JOURNAL binders are $2.50 each in the USA and $3.00 in Canada.

Our last copies of the TT/L-2 reprints are exhausted. Since this article has been reprinted in the May and June 1969 issues of QST we have no plans for more reprints.

RTTY JOURNAL

P.O. Box 837 Royal Oak, Mich. 48068

"Dusty" Dunn — W8CQ

Editor & Publisher

SUBSCRIPTION - 1 Yr. (11 issues)
U.S. - Possessions - Canada - Mexico

First Class - $3.00
Air Mail - $3.50

All Foreign Countries-1st Class $3.50
Air Mail - South, Central America $5.00
All Others - Air Mail - - - - - $5.50

1st World RTTY Championship ::

The Committees of several RTTY Group and Societies have come to the decision to make an Award to the "WORLD CHAMPION OF RTTY".

The objects of this Award are as follows:

1) To promote greater interest for the RTTYer taking part in the various RTTY Contest.
2) To increase the competitive spirit during the course of the Contests during the year.
3) To make available an Award to the Radio Amateur who has demonstrated his ability to operate RTTY during a period of one year.

At the present time, the Contests which will count towards this new Award are as follows:

1969 B.A.R.T.G. SPRING RTTY CONTEST
1969 D.A.R.C. RTTY WAE CONTEST
1969 C.A.R.T.G. RTTY SWEEPSTAKES
1969 ALEX VOLTA RTTY CONTEST
1970 GIANT RTTY FLASH CONTEST

The Committee of B.A.R.T.G., the A. VOLTA and the GIANT RTTY FLASH CONTEST wish to thank the Committees of the D.A.R.C. and C.A.R.T.G. Societies for giving permission to make use of their own Contest scores in arriving at the final scoring for "WORLD CHAMPION OF RTTY".

It is hoped that other Societies who organize international Contest will join in this new idea to increase interest in the RTTY mode for Radio Amateurs.

In order to arrive at the final score and to decide the winner, the following points system will be used for each Contest: 30 points to the winner, 25 points for 2nd place, 22 points for 3rd place, 20 points for 4th place, 18 points for 5th place, 17 points for 6th place, 16 points for 7th place... .1 point for 22nd place and all other entrants will be credited with one point.

For the final score for each year, only the best four scores (out of a possible 5) of each operator will be used.

In order to take part in this Award it is not necessary for entrants to send in a claim as the entries of all competitors will be automatically included.

The 1969 Championship will start with the 1969 B.A.R.T.G. Contest and finish with the 1970 Giant Flash Contest.

The 1969 WORLD CHAMPION OF RTTY will receive a plaque and prizes will be awarded for the leading position in the final score. The "cq elettronica" Magazine will make available the Award for each year. The various Societies in turn would nominate the winner for the year for which that Society is responsible and would notify the Magazine "cq elettronica". The Magazine would then present the Award with due acknowledgement to the Society concerned.

***

Are You Identifying Properly

Recently a number of amateurs have been cited by FCC monitoring stations for improper identification procedures. (See September 1969 QST, p. 10, and October 1969 QST, p. 90) Are you idtenfiying your RTTY transmissions properly?

Under current FCC regulations, identification of RTTY transmissions in the 3- to 30-MHz amateur bands is required to be given by International Morse code (you could use voice on 10 meters if you wished, unless a future order moves RTTY operation to the lower 500 kHz of the band) at the beginning and end of each single transmission (or exchange of transmissions), and at intervals not to exceed 10 minutes of a single transmission (or exchange). No identification is required on the teleprinter, and if such identification is given, it does not alleviate the requirement for Morse identification.

In addition, informal "ground rules" were set forth in an FCC order pertaining to Docket 15267 which eliminated the former dual identification requirements effective August 10, 1964. The complete text of the FCC's accompanying letter appears in September 1964 QST, p. 82, and is quoted here in part, "This rule change will enable licensees to employ automatic devices for telegraphic station identification by International Morse code. However, the transmission of the amateur call sign automatically at more than twenty or twenty-five words per minute and/or with a frequency shift of less than about 100 cycles would make identification difficult, especially when monitoring from a mobile unit.

Continued on page 15

CLASSIFIED ADS Rates $1. 30 words - Additional words 2¢ Closing date 1st of month.

NO GLARE WINDOWS for Model 15 & 19 Printers, Cadinum plated & Gold iridite finish, $12.50 P.P. Check or M.O. Bud WA6UEF, 17114 Sunderland Dr., Granada Hills, Calif. 91344.

PARTS - ALL MACHINES - fast service on all machines from 14s thru 35s. SASE for list. Sell Fred your surplus TTY for highest cash or trade. Typetronics, Box 8873, Ft. Lauderdale, Fla. 33310 W4NYF

TYPEWRITER RIBBON REINKER, Hand operated model now only $3.00. K575 or K764 Ink available at all National Cash Register Co. stores at 75¢ per tube. Walter Nettles W7ARS-8355 Tanque Verde Rd. Tucson, Ariz. 85715.

WANTED - ALL KINDS of page printers. Any quantity considered, quote your price and a local representative will contact you if reasonable. Lee Brody, N.Y.-N.J. Phone TTY for the Deaf, 15-06 Radburn Road, Fair Lawn, N.J. 07410.

KEYBOARD; WITH AUTOMATIC Here-is answer back unit for the model 15 or 19 teletype machines. This is device which when tripped will send a pre-coded signal up to 21 characters operated from the keyboard. You can code in your call, name or whatever you desire. Complete, excellent $12 ea. Model 15 teletype machines, send receive, complete with sync motor, cover, and keyboard, excellent $55 ea. With automatic Here-is answer back keyboard $62.50 ea. Send for catalogue. Atlantic Surplus Sales, 300 7th St., Brooklyn, N.Y. 11215.

SAROC NEW QTH Stardust Hotel new QTR February 4-8, 1970. Cocktail parties hosted by Ham Radio Magazine, SWAN and GALAXY. Additional information and Stardust Hotel special SAROC room rate card QSP SASE SAROC, Box 73 Boulder City, Nevada 89005.

TELETYPE PARTS - all models, relays, modification kits, hardware, power supplies (115 VDC 120 ma.), sequential number indicators 0 to 999 mf'd by CLARE for W.U. new and used. Selector magnet drivers, M14 TD's (W.U.) Write your needs SASE CHARLES R. WALL, 858 W. 2nd St., Lansdale, Pa. 19446.

WANTED: 75S-1 with rejection tuning (Waters Q multiplier), also 32S-1, any reasonable shape, No P.S. required. RTTY conversion no obstacle. Fritz Hellmuth, VE4XD, 128 Talon Bay, Winnipeg 8, Manitoba, Canada.

WANTED: Teletype Models 28, 32, 33, and 35 and accessories, printers, etc. We pay highest prices - and freight. Cash or trade. AMBER INDUSTRIAL CORPORATION, P.O. Box 2129, South Station, Newark, N.J. Tel: 201-824-1244.

MODEL 32KSR; teletypewriter, send - receive, with console, and Here-is answer back keyboard to set up identification, 21 characters, operating condition, excellent $180. ea. Atlantic Surplus Sales, 300 7th St., Brooklyn, N.Y. 11215.

SALE 852B FRONT PANEL for model 32KSR teletypewriter, complete with push button switch, relay, resistors, Jones plug etc. excellent $3.50 ea. Also 852A front panel for 32ASR complete with push button switch and on - off switch, three relays resistors, jones plug etc. excellent $4.50 ea. Reader; high speed, tape, Ferranti model Markll, excellent $65. ea. Atlantic Surplus, 300 7th St. Brooklyn, N.Y. 11215.

TRADE 8000 WATT motor generator, 117 or 230 volt single and three phase. Govt. surplus, worth $500. What have you? VE3RH, 106-57 Waterford Dr., Weston, Ontario

TOROIDS 88mhy. center tapped - not potted 5/$1.50 Postpaid. John Dilks III, Rte. 1, Box 218, Mays Landing, N.J. 08330

WANTED: 28ASR. For sale URA8 scope tuning modules new and complete. $15. Get a spare. W3LST, 228 Plummer, Oil City, Pa. 16301

WANTED: Weather bureau type ring, for model #26. K7ANG, 1611 East 19th St., Cheyenne, Wyoming 82001

RTTY PICTURES for sale. Vol. 1-$1, Vol. 2-$2.00. Audio and perforated tapes available. W9DGV, 22110 30th St. Rock Island, Ill. 61201

SALE: COMPLETE MODEL 19 teletypewriter; consists of 15 printer, model 19 keyboard with counter dial, cover, sync. motor, trans-dist. steel table, power supply. $90. each. li packing required add $15. Atlantic Surplus Sales. 300 7th St. Brooklyn, N.Y. 11215.

PLAN NOW TO MAKE 1970 a better year by placing your order now for a custom built Mainline TT/L-2 FSK demodulator complete self contained with a 2" scope indicator with separate power supply all on the same chassis. 2 sets of filters for 850 and 170 shift tuned and adjusted in your unit for excellent performance with an 8 3/4 x 19 gray hammertone silk-screened front panel suitable for rack mounting. Optional grey hammerstone cabinet. Wired and tested by the expert W1SOG. John Roache, J & J Electronics, Canterbury, Conn. 06331

WANTED - Power Supply PP-712/GRC-26. Write describing condition and price. Wanted - operating and maintenance manual for Northern Radio Co. frequency shift keyer type 105, model 4A and power supply type 105 model 4B. Will purchase or copy. All letters answered. P. Shafter, W7BM, 4102 E. North St., Tucson, Ariz. 85716

ADDITIONAL CLASSIFIED on NEXT PAGE

Additional Classified on Page 14

J & J ELECTRONICS extends their Best Wishes to their many friends and patrons for a Merry Xmas and a Happy New Year. It has been a pleasure to serve you.

WANTED: COLLINS filter for 51J3, F500B-14. 1.4KC bandwidth. Cash or swap Heath crystal lattice filter, new, 2.1 KC. #404283 probe assembly for HP410A. . .probe P510 for Tektronix 514D. Roache, Canterbury, Conn. 06331

DX 60A, CONVERTED for RTTY, with W6FFC crystal shifter, $75 4-1000A linear and supply, all band, $400. HW17A 2 meter transceiver converted for RTTY, $130. Floor model 28KSR, excellent shape, $275. Table top 28 cabinet, with legs and ELSU, $50. Model 15's, model 14's and converted triple head TD's - Write. M-338 level R 70, no cabinet, nearly new, trade for M-32 or 28 reperf or 28 TD. Need cabinet for model LRB-23, M 28 typing reperf. Cecil Armstrong, 3109 E. Roma, Phoenix, Ariz. 85016

HANDSOME, DEBONAIR owner of incomplete model 37 printers and reperforators seeks correspondence with owners of this latest teletype goodie, object; swapping enough parts to get the thing to run. G. White, 5716 Kings Highway, Alexandria, Va. 22303

TOROID 88 or 44 mhy. Center-tapped, never potted, 4/$2 POSTPAID. Fresh 11/16" oiled perf tape $3/box/10, $10/case/40. Model 32KSR pedestal mounted page printer, 60 or 100 speed, complete $200. Lorenz, German page printer (slightly larger than 15 but has built-in perf and TD units) with table $100. (Send stamp for photo or see Florida RTTY Bulletin for Nov.) FRXD 60 speed typing reperf with TD base $25. Gears for most machines $6/set POSTPAID. RCA CV-57/URR terminal unit $85. FACSIMILE paper. . 12x19" sheets, fresh. 250 sheet package for TXC-1 or cupt it up. $3. Model 28 typing units good condition $90. Stamp for list. Van W2DLT 302R Passaic Ave., Stirling, N.J. 07980

NORTHERN RADIO EQUIPMENT Demodulator - Type 104 Model 3 - $35.00. Frequency and shift monitor type 106 Model 4 - $25.00. Frequency shift keyer type 105 Model 4 W/PS and FSK/VFO adapter unit and complete spare parts kit. New in original packing $120.00. URA-8A RTTY audio converter new $135.00. URA-8A comparator new $100.00. URA-8A Module Assemblies, tuning scope $15.00. Discriminator $20.00, converter keying unit $18, comparator keying unit $15. Filter and terminal board assembly $5. Rack mounting cabinet for two convertors, one comparator $15. Model 14TD $25. Model 15 Printer $85. Electron Mechanical Perforator with Keyboard and table (Iron Horse) $35. All items new or in excellent condition - Prices FOB, R.B. Ladd, W3KA, 10406 Insley St., Silver Spring, Md. 20902 -- 588-2580

PUT A NICE NEW resilient platen roller on your #28, #29, (#35 or #37 Teletype machine, friction or sprocket type; $7.50 postpaid with your old platen, immediate return. Excellent model 32KSR; $200. Also wanted, #28, #35 material. G.E. White, 5716 N. Kings Highway, Alexandria, Va. 22303

FOR SALE: Manuals, schematics, gears, parts for teletype equipment. Synca motors for M14, M15 - $8. M14 TD good working order, specify 60-67- or 75 wpm $25. M14 typing reperf, good working order $35. Wanted M28 motors. Jim Cooper, 834 Palmer, Maywood, N.J. 07607

WANTED - 1500 to 2000 vt. power supply for cash or trade for 0-300 vt. 300 MA regulated power supply made by LAMBA (excellent). Also need table for model 28 printer. Sell RDZ 225 to 400 Mhz receiver $50. FOB 115 Aaron Ave., Bristol, R.I. 02809, W1IOW

PARTS FOR MODEL 14, 15, 19 for converting to 60wpm. and communication type pallets and keys. Fay Wilson. WA8KJH 409 Nottingham Dr., Brooklyn, Mich. 49230

TOROID COILS 88 mh, uncased, postpaid, 5 for $2. LaVon Zachry, PO Box 845 Apple Valley, Calif. 92307

Identifying

Continued from page 15

Licensees are advised, therefore, that for telegraphic identification they will be expected to observe reasonable standards for code speed and keying methods. In the event that there are abuses in this area, the Commission will be obliged to set forth standards in the Rules."

So as far as hf RTTY operation, we're legal as long as we send our own call by Morse code at the beginning and end of each transmission or every ten minutes using either A1 or F1 emission with a shift of 100 Hz or greater, and at a speed of 25 wpm or less. . .nothing more. Keyboard identification is not required, but makes it convenient for those who may be only listening. Sort of makes "CW ID FOLLOWS" seem ridiculous, doesn't it!

--Jerry Hall, K1PLP

***

THEORY & VHF COLUMN

Ron, W8BBB, column on Theory and Application and VHF News is not appearing this month so that we will have room to finish the TMK article but this popular column will be back next month as usual.

***

BROAD MINDED

USE NARROW SHIFT

***